Model No. 0986 Terminal Box Kit: Mounting Instructions for Bodine Type 34R, 42R, and 48R (AC) Gearmotors and Motors

Terminal box kit model 0986 is intended to be used with our 42R6-FX permanent split capacitor gearmotors if a user desires to install the run capacitor, P/N 49401145, inside this IP-44 rated terminal box. This oversized terminal box can also be installed on most standard 34R, 42R, and 48R gearmotors and motors. ***(Exception: not on type 34R4 and 42R3 gearmotors/motors.)***

1) Unscrew and remove the plastic bushing from the motor's center ring lead exit and discard. *(Exception: For type 34R gearmotor/motor, leave standard bushing in place.)*
2) Remove the protective backing and apply the foam rubber gasket to the outside face of the terminal box, aligning the precut gasket holes with the terminal box holes.
3) If possible, position the gearmotor/motor with the lead exit facing up. Guide the motor leads through the .625 inch diameter hole in the bottom of the terminal box. Slip the supplied bushing over the motor leads, flange side trailing, and snap the bushing into the hole. *(Exception: For type 34R gearmotors/motors, the supplied snap bushing is not used and may be discarded.)*
4) Position the terminal box over the corresponding tapped mounting holes in the motor center ring. Install the two (2) supplied #10-32 x .38 inch long countersunk head screws and tighten to 30 lb-in.
5) The motor leads may be shortened by cutting and re-stripping if deemed necessary. Connect the unit to the line per the connection diagram provided with the motor. ***(WARNING:*** *wiring must conform to NEC and other applicable standards.)*
6) Remove the protective backing of the foam cover gasket and adhere it to the inside of the box cover. Fasten the box cover onto the terminal box using the four (4) supplied #8-32 x .81 long hex head screws and the four (4) toothed lock washers. Tighten screws to 14-18 Lb-in.

Please contact our tech support team if you have additional questions or need assistance. E-mail: info@bodine-electric.com.

⚠ WARNING: Gearmotor/motor must be disconnected from electrical power source before installing terminal box.

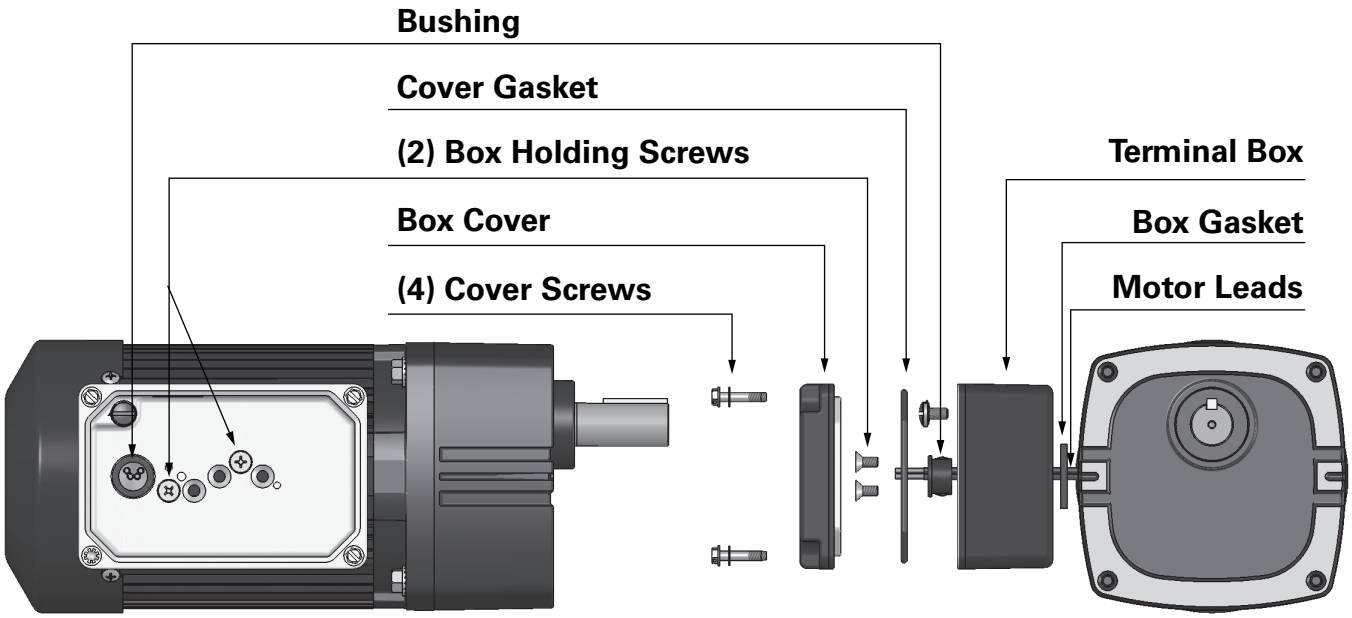

See page 2 for Bodine type 33A and 42A PMDC gearmotor and motor install instructions.

Printing Instructions per SMKDI-770-01.

© Copyright 2024 Bodine Electric Company. Data subject to change without notice.

Model No. 0986 Terminal Box Kit: Mounting Instructions for Bodine Type 33A and 42A (PMDC) Gearmotors and Motors

This oversized terminal box can be installed on most of our standard 33A and 42A gearmotors and motors if IP-44 is required, or if our standard terminal box, model 0984 is not large enough.

1) Cut and strip the motor power cord to the desired length.

2) Remove the protective backing and apply the foam rubber gasket to the outside face of the terminal box, aligning the precut gasket holes with the terminal box holes. **For 33A gearmotors/motors–two gaskets are required. One affixed to the terminal box and one affixed to the motor ring, both aligned with the appropriate holes.**

3) If possible, position the gearmotor/motor with the cord exit facing up. Guide the motor power cord through the .625 inch diameter hole in the bottom of the terminal box. The supplied snap bushing is not used and may be discarded.

4) Position the terminal box over the corresponding tapped mounting holes in the motor center ring. Install the two (2) supplied #10-32 x .38 inch long countersunk head screws and tighten to 30 lb-in.

5) Connect the unit to the DC supply per the connection diagram provided with the gearmotor/motor. *(**WARNING:** Wiring must conform to NEC and other applicable standards.)*

6) Remove the protective backing of the foam cover gasket and adhere it to the inside of the box cover. Fasten the box cover onto the terminal box using the four (4) supplied #8-32 x .81 long hex head screws and the four (4) toothed lock washers. Tighten screws to 14-18 Lb-in.

Please contact our tech support team if you have additional questions or need assistance. E-mail: info@bodine-electric.com.

⚠ WARNING: Gearmotor/motor must be disconnected from electrical power source before installing terminal box.

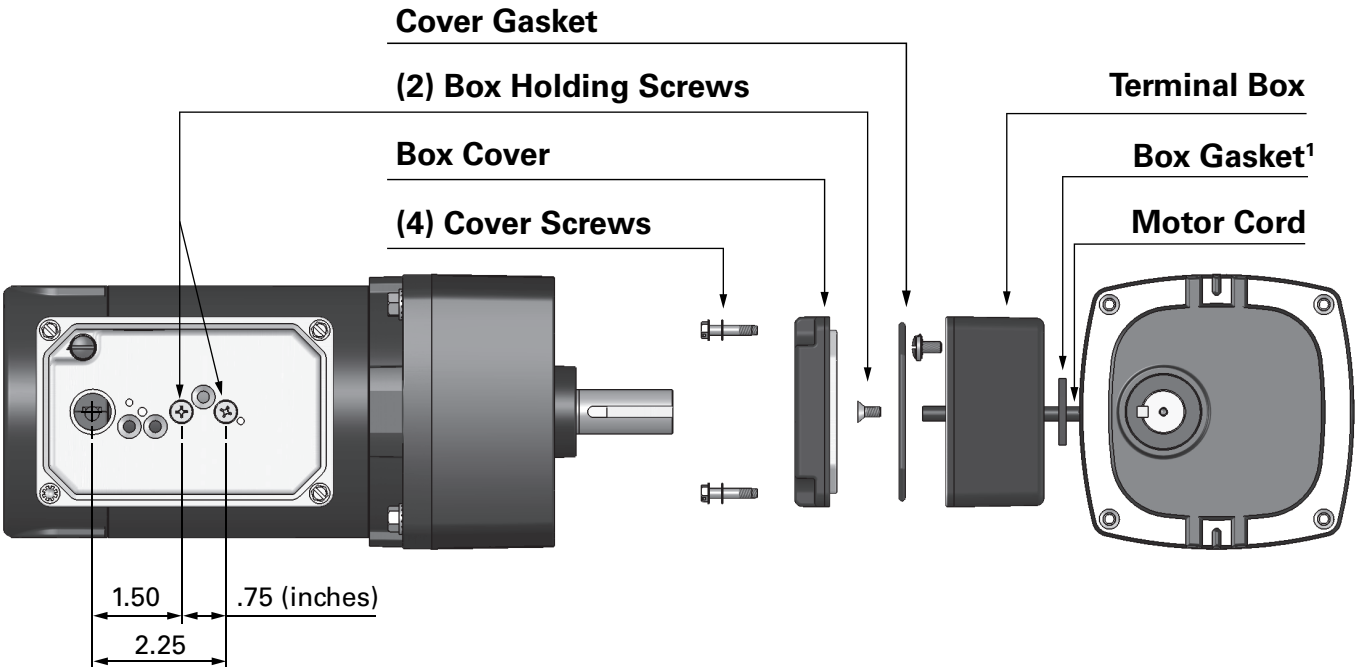

[1.] **Two gaskets are required for 33A gearmotors/motors**.

See page 1 for Bodine type 34R, 42R, and 48R AC gearmotors and motors.

Printing Instructions per SMKDI-770-01.

© Copyright 2024 Bodine Electric Company. Data subject to change without notice.