BODINE ELECTRIC COMPANY	PART NO./REV: INFM0030 A.0
	DESCRIPTION: MOTOR 42A7BEPM METRIC
	SHEET: Sheet1 / SCALE: 2:3 / C
	UNLESS OTHERWISE SPECIFIED: UNITS ARE IN mm [INCHES] ANGLES: X°:±3° X.X°:±0.5°

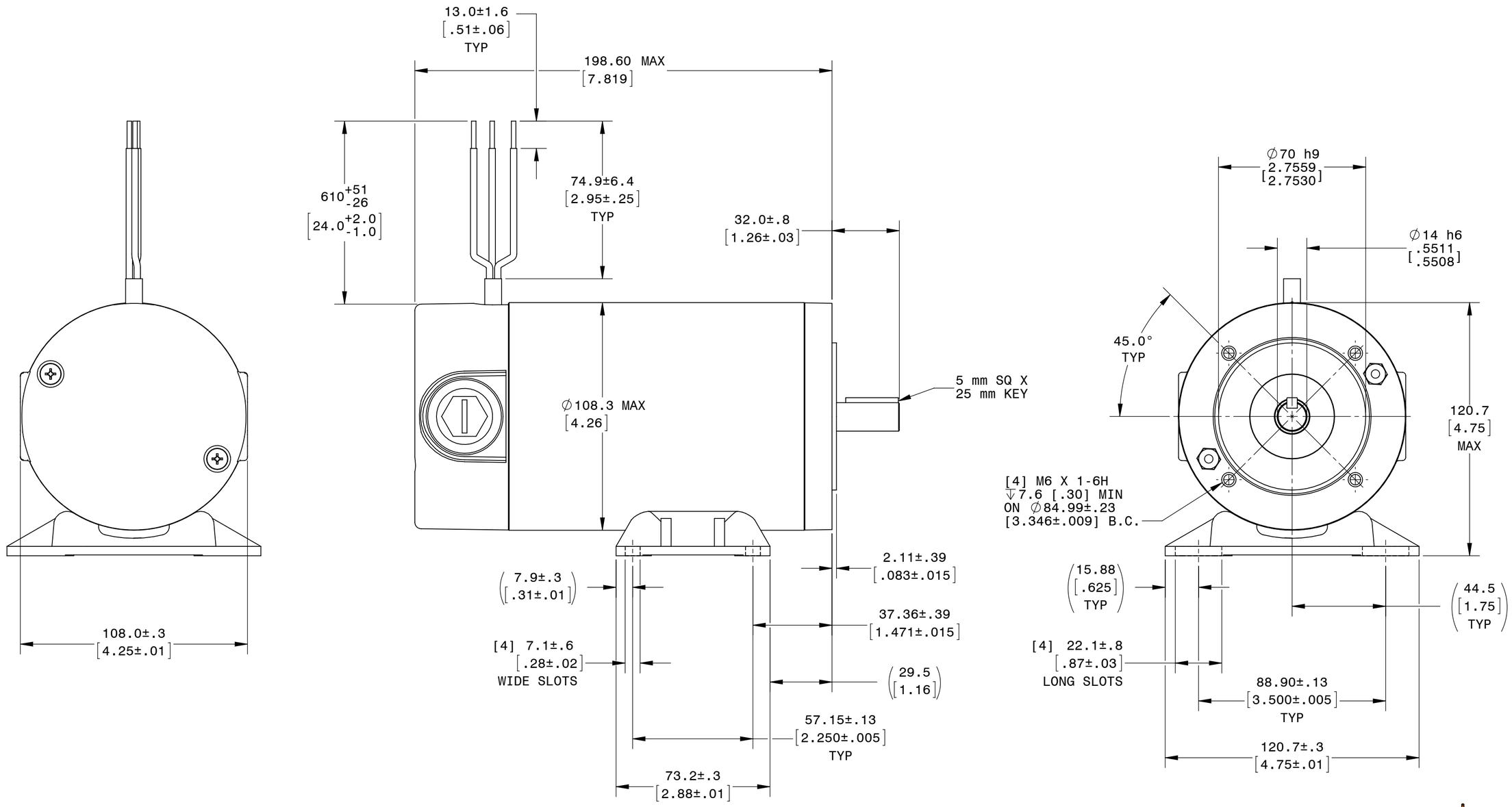

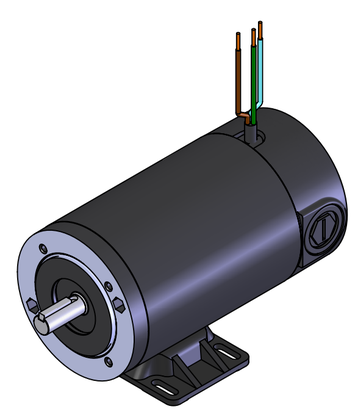

REPRESENTATIVE OF MODEL NUMBER(S):

4231 4237