BODINE ELECTRIC COMPANY

PART NO./REV:	INFM0275 C
DESCRIPTION:	GEARMOTOR 34B4FEBL-FX
SHEET: 1/1	UNLESS OTHERWISE SPECIFIED:
SCALE: 1:2	UNITS ARE IN INCHES [mm]
	TOLERANCES:.XX:±.01 .XXX:±.005
B	ANGLES: X°:±3° X.X°:±0.5°

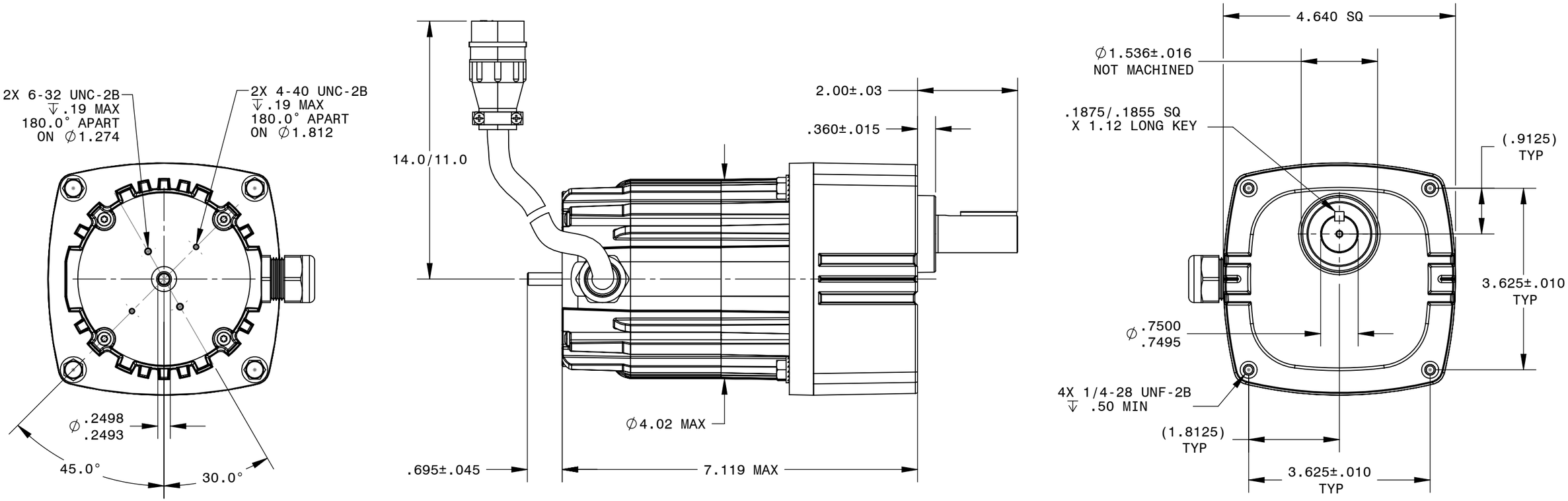

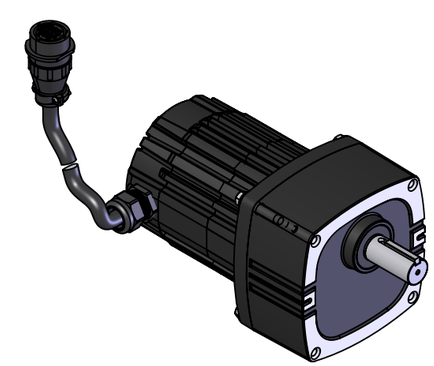

REPRESENTATIVE OF MODEL NUMBER(S):

3480 3482 3483 3485